Stress and stiffness analysis of beam-sections

Lars Damkilde

Department of Structural Engineering and Materials
Technical University of Denmark
DK-2800 Lyngby

November 2000

Summary

The report gives an introduction to stiffness and stress analysis of beam-sections. The purpose is to estimate the cross-sectional stiffness parameters i.e. axial, bending, shear and torsional stiffness from the geometry and material properties of the beam section. Furthermore the stress distribution in the beam-section from the internal forces i.e. axial force, bending moments, shear forces and torsional moment is calculated.
Axial force and bending moments are treated based on the assumption of "plane sections remain plane". Methods to find the elastic center and principal axis are given including a computer oriented formulation based on triangularization of the beam-section. The stress distribution - Navier's formula - is formulated including beam-sections build of different materials. Examples illustrate the methods.
The theoretical shear stress distribution for a rectangular profile from shear forces is presented. The Grashof formula for calculating shearing forces is presented and illustrated with examples. The torsional problem is not treated in detail and merely an overview of the problem is given. The torsion problem is divided up into: open profiles, closed profiles and solid sections. Examples on each type is given and comparisons are made.
The report has 2 appendices. The first lists a MatLab procedure for calculating sectional properties for a general polygonal cross-section. The second gives solutions for a number of parametric profiles e.g. I, U and Z-profiles.

Preface

The notes are used for a preliminary course in Structural Analysis. The aim is to give a sufficient background for analysis of stiffness and stresses in beam-sections. The theory is formulated as direct as possible and often illustrated by an example. The methods are general but emphasize has been on explaining the different steps.

The axial and bending problems are solved based on the assumption of "plane sections remain plane". Methods to calculate the elastic center and principal axis are given including a computer algorithm. The stress distribution is given through Navier's formula in a formulation that allows for different materials in a cross-section.

The shear and torsion problem is treated in less detail. Grashof's formula for shearing forces is given and illustrated by examples. The torsion problem is divided up into: open profiles, closed profiles and solid sections. Only results are given, and for a more detailed discussion the reader has to consult other textbooks.

Lyngby, November 2000

Lars Damkilde

Table of Contents

1 Beam theory **1**

1.1 Stiffness properties 2

1.2 Normal and shear stresses 3

2 Bending moments and axial force **5**

2.1 Basic assumption 5

2.2 Reference system 6

2.3 Example: Cross-section symmetric about y-axis 7

2.4 Stress distribution - Navier 9

2.5 General cross-section 10

2.6 Cross-sections of different materials 12

2.7 Numerical methods 14

3 Shear forces and torsional moment **16**

3.1 Shear in rectangular cross-section 16

3.2 Shear forces - Grashof 18

3.3 Example on shear stresses 19

3.4 Torsional stiffness and shear stresses 21

3.4.1 Open profile 21

3.4.2 Closed profile 23

3.4.3 Solid section 24

References **27**

A MatLab procedure for polygon **28**

B Solutions for some parametric profiles **30**

Chapter 1

Beam theory

Beams are structural elements where the length is several times larger than the dimensions in any of the two other directions. All beam theories describe the beam as a 1-dimensional structure, and the beam axis denoted x is in the length direction. The cross-sectional geometry is represented by a number of scalar quantities such as area and moments of inertia. The displacements and rotations describe the deformation of the beam-axis, and the displacements in the cross-section are direct related to the deformation of the beam-axis. The internal forces - axial force, N, shear forces V_z, V_y and bending/torsion moments, M_z, M_y, M_x - are also related to the beam-axis as shown in Figure 1.1. The internal forces represent normal and shear stress distributions over the cross-section.

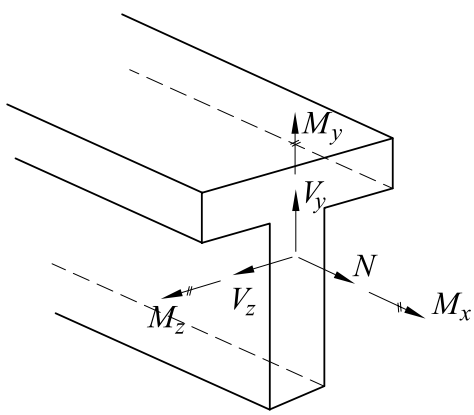

Figure 1.1: Sectional forces

Beam theory is a simplification of the 3-dimensional continuum mechanics problem. Several different beam theories exist, and the differences lie in the simplifications. In all beam theories the cross-sectional stiffness properties have to be determined, and simplified continuum mechanics solutions are used. The internal forces also have to be translated into stress distributions over the cross-section, and simplified continuum mechanics solutions are again applied. The final solutions are not entirely consistent as they are a result of approximations but in many practical applications it is of no importance. The validity of the beam theory depends on the cross-sectional geometry, length, loads and boundary conditions.

The most simple theory which is called Euler-Bernoulli theory assumes that the cross-section remains orthogonal to the beam axis. The theory treats axial stiffness and bending stiffness but disregards deformations due to shear forces. Torsion is treated separately and is discussed later. The theory is widely used, and is sufficiently as long as the cross-section is small and compact. The shear forces can not be determined via strains and have to be found through equilibrium conditions, see Grashof's formula in Chapter 3.

A more sophisticated beam theory - called Timoshenko beam theory - takes the shear deformation into account. The idea is to allow a deformation between the beam axis and the cross-section. In this way a shear strain is defined, and this allows a direct representation of the shear forces. The shear strain distribution over the cross section is uniform and more advanced beam theories allow a more realistic distribution. A shear flexible beam theory is relevant for low ratios of beam length to beam height or for materials with a low shear stiffness or for thin-walled profiles with a thin web.

Torsion is in both Euler-Bernoulli and Timoshenko beams treated as a separate problem. The torsional stiffness depends very much on the cross-section, and in chapter 3 different types - open profile, closed profile and solid sections - are discussed. Torsion is in this context treated as homogeneous torsion, i.e. that each cross-sectional part deforms equally. The deformation state consists of both a rotation of the cross-section and axial deformation - so-called warping. This solution does not comply with the boundary conditions, but normally this has no importance.

For thin-walled structures torsion is a more complicated problem. Vlasov developed a theory which could describe non-uniform torsion of a beam including non-uniform warping of the cross-section. The non-uniform warping results in normal stresses, and it is necessary to define a new cross-sectional stiffness parameter, the so-called warping stiffness. The Vlasov beam theory is important for open thin-walled steel profiles especially in connection with stability phenomena such a lateral buckling.

In all of the above theories it is assumed that the cross-section retains its form. More advanced beam theories allow deformation in the cross-sectional plane. The complexity of the theories become high, and in many cases the extra cross-sectional parameters can be hard to access. Many of these solutions will probably in the future be solved more economically by a full 3-Dimensional Finite Element solution based on shell or solid elements. Deformation in the beam sections own plane can be of importance if the profile has parts with small thickness.

1.1 Stiffness properties

Analysis of statically indeterminate frames requires information of the stiffness of the individual beam elements. In Figure 1.2 four different types of loadings are shown.

In case a) the loading gives axial force, and the stiffness parameter is EA, where E is the elastic modulus for the material and A the cross-sectional area. In some cases the contribution to the axial deformation is disregarded, e.g. in manual calculation of frames via the force- or deformation-method. The simplification is often reasonable as deformations due to bending normally are much larger.

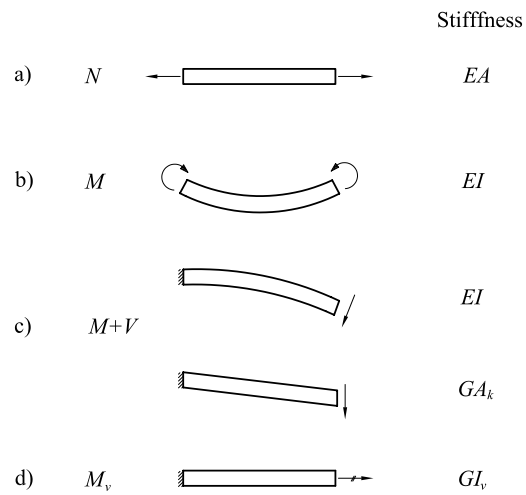

Figure 1.2: Beam stiffness

In case b) the loading is pure bending, i.e. no shear force. The stiffness parameters are EI_z and EI_y, where I_y and I_z are the moments of inertia about the principal axis in the cross-section. Chapter 2 deals with calculation of the principal moments of inertia. Bending about the z- and y-axis are often described as bending about strong or week axis. Bending about the strong axis has the largest moment of inertia, and is the most economically way to exploit the structure. Bending about the week axis is often only due to secondary loadings or due to stability problems e.g. lateral buckling.

In case c) the loading is bending and shear. The shear deformations are often neglected, but can be of importance for thin-walled profiles or for a low ratio of beam length to beam height. The stiffness parameter is GA_k, where G is the shear modulus of the material and A_k the so-called shear area i.e. the part of the area that carries the shear force. In chapter 3 an example with shear deformation is given.

In case d) the loading is torsion. The corresponding stiffness parameter is GI_v, where G is the shear modulus of the material and I_v the torsional moment of inertia. In chapter 3 solutions for open profiles, closed profiles and solid sections are given. It is important to notice that a closed profile has a much larger stiffness than an open profile. Structures normally do not carry load by torsional moments, but torsion can be part of a stability problem. In lateral buckling the critical load is a function of both the torsional stiffness and the bending stiffness about the week axis.

1.2 Normal and shear stresses

The result of a frame analysis is the internal forces in each beam-section. Based on these informations the strength of the cross-section is evaluated. In this respect it is important to know the corresponding distribution of stresses.

The stresses in a cross-section can be divided into normal-stresses, which are perpendicular to the cross-section and shear stresses which act in the cross-sectional plane.

The normal stresses correspond to axial force and bending moments as shown in Figure

1.3. Chapter 2 deals with analysis of the stress distribution from axial force and bending moments. The so-called Navier's formula is derived, which gives the normal stress distribution on the cross-section.

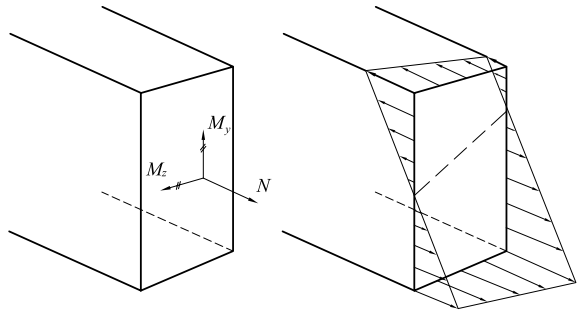

Figure 1.3: Normal stresses from axial force and bending moments

The shearing stresses correspond to shear forces in two directions and a torsional moment. The distribution of shear stresses from a shear force is shown in Figure 1.4. Chapter 3 deals with calculation of the shear stresses based on Grashof's formula.

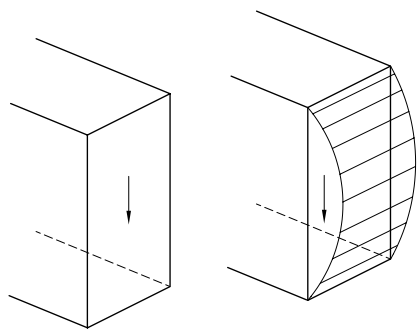

Figure 1.4: Shear stresses from shear force

The distribution of shear stresses form a torsional moment on a solid section is shown in Figure 1.5.

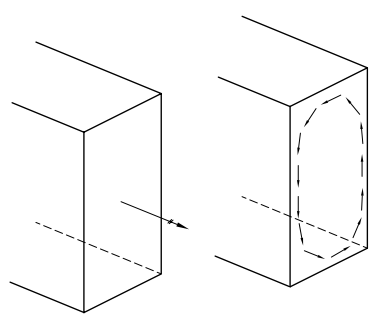

Figure 1.5: Shear stresses from torsional moment

The general distribution of shear stresses form torsional moments is complicated. In Chapter 3 solutions for three different types - open profile, closed profile and solid section - are presented.

Chapter 2

Bending moments and axial force

This chapter deals with the stress distribution caused by bending moments and axial force. The stresses will be normal stresses perpendicular to the cross-section. The basic assumption gives a linear strain distribution over the cross-section. The elastic center and principal axis are introduced in two steps. First a profile symmetric about the z-axis is examined and afterwards a general cross-section is treated. The principal moments of inertia are defined and illustrated by examples including cross-sections made up of different materials. The stress distribution over the cross-section is given by the so-called Navier's formula. Finally an algorithmic formulation for a triangulated profile is given.

2.1 Basic assumption

The basic assumption in beam theory is that:

"Plane sections remain plane during deformation."

This assumption implies that the normal strain distribution over the cross-section also has to be linear. The magnitude of the normal strain depends on the curvatures of the beam and the axial elongation. The curvature κ_z is due to displacements in the y-direction and gives normal strains which vary linear with y. The sign is determined so that a positive curvature gives compression in the top of the beam (positive y). This has no physical importance but defines how the curvature and displacement in y-direction are related. The curvature κ_y is due to movements in the z-direction and gives normal strains which vary linear with z. The sign is according to practice chosen positive. The axial elongation is given by ε_C where C refers to the elastic center of the cross-section.

$$\varepsilon_x = \varepsilon_C - \kappa_z y + \kappa_y z \tag{2.1}$$

In order to simplify the formulas for stress distribution over the cross-section a coordinate system through the elastic center is used. The orientation of the axis set is determined so that a curvature about the z-axis only gives moment about the z-axis and similarly for the y-direction.

The direct coupling between axial force/axial strain and bending moments/curvatures which will be shown in a following section implies that a proper reference coordinate system has to be chosen. In the following sections a general method for establishing this reference system is given. Also formulas for calculating moment of inertia are presented.

2.2 Reference system

Figure 2.1 shows a cross-section with two sets of axis. An original system y- and z, and a system through the so-called elastic center y'- and z'. The task is to determine the elastic center, which can be compared to the center of gravity. The position $C = (y_C, z_C)$ is defined so that the static moment about the y'- and z'-axes through C is 0.

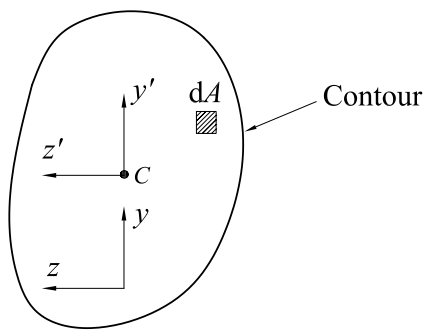

Figure 2.1: Cross-section

$$\begin{aligned} \int_A (y - y_C) dA &= 0 \\ \int_A (z - z_C) dA &= 0 \end{aligned} \tag{2.2}$$

The coordinates of the elastic center can then be calculated by:

$$\begin{aligned} y_C &= \frac{\int_A y dA}{A} \\ z_C &= \frac{\int_A z dA}{A} \end{aligned} \tag{2.3}$$

The static moments about the original axes y and z can be calculated by dividing the cross-section into simple shapes e.g. rectangles and triangles. The static moment of the whole cross-section can be taken as a sum of individual contributions.

The contribution for a part of the cross-section can be given as the area of the part, ΔA, multiplied by the distance from the center of gravity of the part to the axis, y_P. The distance can be both positive and negative.

$$\Delta S_z = \Delta A \; y_P \tag{2.4}$$

The moment of inertia about the z'-axis, $I_{z'z'}$ is given by:

$$I_{z'z'} = \int_A (y - y_C)^2 dA \tag{2.5}$$

The moment of inertia about the y'-axis is defined similarly.
The integral can again be calculated by dividing into simpler parts. The contribution from a part of the cross-section can be given as:

$$\Delta I_{z'z'} = \Delta A \; y_P^2 + \Delta I_{z_l z_l} \tag{2.6}$$

where $\Delta I_{z_l z_l}$ is the parts moment of inertia calculated about a local axis z_l through the elastic center of the part.

2.3 Example: Cross-section symmetric about y-axis

In Figure 2.2 a cross-section symmetric about the y-axis is shown. The aim is to determine the elastic center and the moments of inertia about y'- and z'-axis respectively.

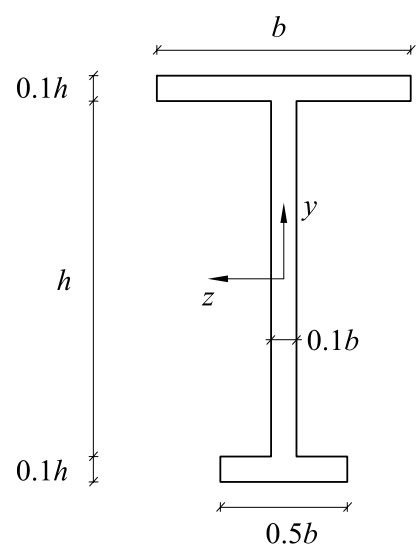

Figure 2.2: Symmetric cross-section

The cross-section is divided into three parts - the upper and lower part with thickness $0.1h$ and width b respectively $0.5b$ and the web with thickness $0.1b$ and height h.
The area of the cross-section is given by

$$A = b \; 0.1h + 0.1b \; h + 0.5b \; 0.1h = 0.25 \; bh \tag{2.7}$$

Due to symmetry z_C must be 0. In order to calculate y_C the static moment about the z-axis is calculated. Only the upper and lower parts contribute to the static moment about the z-axis.

$$S_z = 0.1 \; bh(0.5h + \frac{1}{2} \; 0.1 \; h) - 0.05 \; bh(0.5 \; h + \frac{1}{2} \; 0.1 \; h) = 0.0275 \; bh^2 \tag{2.8}$$

The y-coordinate of the elastic center is given by

$$y_C = \frac{S_z}{A} = 0.11h \tag{2.9}$$

The moment of inertia $I_{z'z'}$ is calculated by three individual contributions. The moment of inertia for a rectangular cross-section is given by $\frac{1}{12}bh^3$.
The upper flange:

$$\Delta I_{z'z'} = \frac{1}{12}\ b\ (0.1h)^3 + 0.1\ bh\ (0.55h - y_C)^2 = 0.01944\ bh^3 \tag{2.10}$$

The lower flange:

$$\Delta I_{z'z'} = \frac{1}{12}\ 0.5b\ (0.1h)^3 + 0.05\ bh\ (0.55h + y_C)^2 = 0.02182\ bh^3 \tag{2.11}$$

The web:

$$\Delta I_{z'z'} = \frac{1}{12}0.1\ bh^3 + 0.1\ bh\ y_C^2 = 0.00954\ bh^3 \tag{2.12}$$

The total moment of inertia $I_{z'z'}$ is given as the sum of the three contributions:

$$I_{z'z'} = 0.0508\ bh^3 \tag{2.13}$$

The radius of inertia, i_z is defined as:

$$i_z^2 = \frac{I_{z'z'}}{A} = (0.451\ h)^2 \tag{2.14}$$

The radius of inertia can be viewed as an average distance for all parts of the cross-section from the elastic center. The radius of inertia has to be smaller than the maximum distance from the elastic center to any point in the cross-section. In the example the flanges have the major contribution to the moment of inertia and therefore the value of i_z is close to $h/2$.
The moment of inertia $I_{y'y'}$ is also calculated as a sum of contributions from the upper- and lower-flange and the web.

$$I_{y'y'} = \frac{1}{12}0.1\ hb^3 + \frac{1}{12}h\ (0.1b)^3 + \frac{1}{12}0.1\ h\ (0.5b)^3 = 0.009458\ hb^3 \tag{2.15}$$

The radius of inertia i_y is found similarly to i_z, see Equation (2.14).

$$i_y^2 = \frac{I_{y'y'}}{A} = (0.1945\ b)^2 \tag{2.16}$$

As the section is symmetric about the y-axis the so-called centrifugal moment of inertia $I_{y'z'} = \int_A y'z'dA = 0$. This is important for the following stress analysis of the cross-section.

2.4 Stress distribution - Navier

In this section the y- and z-axis are principal axes. This means that the axis set has origo in the elastic center, and that the mixed moment of inertia $I_{yz} = 0$. In the previous section the mixed moment of inertia is 0 due to symmetry, and in the following section a general method for establishing a set of principal axes is given.

In order to find the resulting force and moments the stress distribution is integrated over the cross-section. As the axes are principal axes we have:

$$\begin{aligned} \int_A y dA &= 0 \\ \int_A z dA &= 0 \\ \int_A yz dA &= I_{yz} = 0 \end{aligned} \tag{2.17}$$

The normal stress σ_x is given by Hooke's law as:

$$\sigma_x = E\varepsilon_x \tag{2.18}$$

The axial force, N, is

$$N = \int_A \sigma_x dA = \int_A E\varepsilon_x dA = EA\varepsilon_C \tag{2.19}$$

The moment about the z-axis is given by

$$M_z = \int_A -y\sigma_x dA = \int_A -yE\varepsilon_x dA = EI_{zz}\kappa_z \tag{2.20}$$

The moment about the y-axis is given by

$$M_y = \int_A z\sigma_x dA = \int_A zE\varepsilon_x dA = EI_{yy}\kappa_y \tag{2.21}$$

Through the formulas (2.19)-(2.21) the strain distribution from (2.1) can be rewritten as:

$$\varepsilon_x = \frac{N}{EA} - \frac{M_z}{EI_{zz}}y + \frac{M_y}{EI_{yy}}z \tag{2.22}$$

This formula shows that a bending moment M_z only gives a curvature κ_z, see Equation (2.1), and similar for a bending moment M_y. This decoupling is a consequence of the chosen coordinate system. The axes in this system are therefore described as principal axes.

The stress distribution - Navier's formula - is given by:

$$\sigma_x = \frac{N}{A} - \frac{M_z}{I_{zz}}y + \frac{M_y}{I_{yy}}z \tag{2.23}$$

The maximal stresses are found on the contour of the profile. For symmetric profiles it is often convenient to introduce the moment of resistance, W_z, as:

$$W_z = \frac{I_{zz}}{y_{max}} \tag{2.24}$$

The numerical value of the maximum stress from a bending moment M_z is given by:

$$\sigma_{bending} = \frac{M_z}{W_z} \tag{2.25}$$

or the moment capacity of a cross-section can be written as

$$M_{max} = W_z \ \sigma_Y \tag{2.26}$$

where σ_Y defines the maximum allowable stress for the material.
The moment of resistance for bending about the y-axis, W_y, is defined in a similar manner. For non-symmetric profiles the moment of resistance is not very useful as maximum points can be found for different numeric values of the z- or y-coordinate.

2.5 General cross-section

The method is illustrated by a non-symmetric profile shown in Figure 2.3.

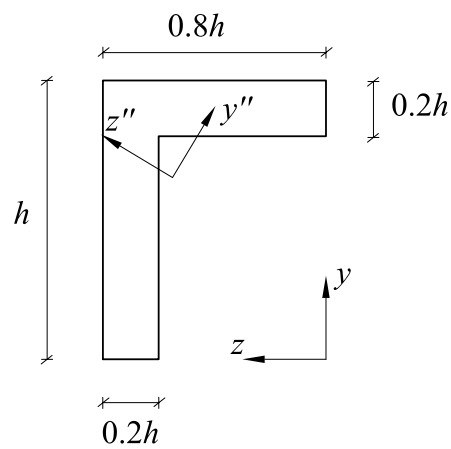

Figure 2.3: General cross-section

The elastic center is defined by Equation (2.2). The cross-section is divided into 2 parts: A rectangle with dimensions $h \times 0.2h$ and a rectangle with dimensions $0.6h \times 0.2h$. The static moments about the y- and z-axes are:

$$\begin{aligned} S_z &= 0.2h^2 \times 0.5h + 0.12h^2 \times 0.9h = 0.208h^3 \\ S_y &= 0.2h^2 \times 0.7h + 0.12h^2 \times 0.3h = 0.176h^3 \end{aligned} \tag{2.27}$$

The cross-section has $A = 0.32h^2$, and the elastic center is defined by:

$$y_C = \frac{S_z}{A} = 0.65h \qquad \text{and} \qquad z_C = \frac{S_y}{A} = 0.55h \tag{2.28}$$

The moments of inertia about axes through the elastic center and parallel to the y- and z-axis, $I_{z'z'}$ and $I_{y'y'}$ are:

$$\begin{aligned} I_{z'z'} &= \frac{1}{12}0.2hh^3 + (0.5h - y_C)^2 0.2h^2 + \frac{1}{12}0.6h(0.2h)^3 + \\ &\quad (0.9h - y_C)^2 0.12h^2 = 0.02907h^4 \\ I_{y'y'} &= \frac{1}{12}h(0.2h)^3 + (0.7h - z_C)^2 0.2h^2 + \frac{1}{12}0.2h(0.6h)^3 + \\ &\quad (0.3h - z_C)^2 0.12h^2 = 0.01627h^4 \end{aligned} \tag{2.29}$$

The centrifugal moment of inertia $I_{z'y'}$ is defined by:

$$I_{y'z'} = \int_A y'z'dA \tag{2.30}$$

The integral can be calculated by dividing the cross-section into simpler parts. Contribution from a rectangular part with sides parallel to the coordinate axes is:

$$\Delta I_{z'y'} = \Delta A \; y_P z_P \tag{2.31}$$

where ΔA is the area of the part and the elastic center for the part has coordinates (y_P, z_P). In the example $I_{y'z'}$ is given by:

$$I_{y'z'} = 0.2h^2(0.7h - z_C)(0.5h - y_C) + 0.12h^2(0.3h - z_C)(0.9h - y_C) = -0.012h^4 \tag{2.32}$$

In order to handle the stress distribution in a simple manner the coordinate system through the elastic center is rotated so that the centrifugal moment of inertia $I_{y'z'}$ vanishes. The rotation angle, v, is measured anti-clockwise i.e. from the y-axis towards the z-axis.
The coordinates in the rotated system are denoted y'' and z'', and the transformation formulas gives the relations.

$$\begin{aligned} y'' &= y' \cos v + z' \sin v \\ z'' &= -y' \sin v + z' \cos v \end{aligned} \tag{2.33}$$

The idea is to determine the angle v so that the centrifugal moment disappears. The coordinate transformation is inserted in the definition of $I_{y''z''}$ as:

$$\int_A y''z''dA = \int_A [(-y'^2 + z'^2)\cos v \sin v + y'z'(\cos^2 v - \sin^2 v)]dA = 0 \tag{2.34}$$

Using the definitions of $I_{y'y'}, I_{z'z'}$ and $I_{y'z'}$ together with $\sin 2v = 2\sin v \cos v$ and $\cos 2v = \cos^2 v - \sin^2 v$ Equation (2.34) can be stated as:

$$\tan 2v = \frac{2I_{y'z'}}{I_{z'z'} - I_{y'y'}} \tag{2.35}$$

The moment of inertia $I_{y''y''}$ and $I_{z''z''}$ can be found be inserting the coordinate transformation in the definition:

$$\begin{aligned} I_{z''z''} &= I_{z'z'}\cos^2 v + I_{y'y'}\sin^2 v + I_{y'z'}\sin 2v \\ I_{y''y''} &= I_{y'y'}\cos^2 v + I_{z'z'}\sin^2 v - I_{y'z'}\sin 2v \end{aligned} \tag{2.36}$$

In the example the angle v is determined as:

$$\tan 2v = \frac{-2\ 0.012h^4}{0.02907h^4 - 0.01627h^4} \qquad \Rightarrow \qquad v = -30.96^{\mathrm{o}} \tag{2.37}$$

and the moments of inertia as

$$I_{z''z''} = 0.03627h^4 \qquad \text{and} \qquad I_{y''y''} = 0.00907h^4 \tag{2.38}$$

These two moments of inertia are the principal moments of inertia.

The transformation is equivalent to the transformation between stresses and principal stresses. From Equation (2.36) it is easily seen that the sum of the moments of inertia is identical in the two different coordinate systems $y' - z'$ and $y'' - z''$.

2.6 Cross-sections of different materials

In Figure 2.4 a cross-section made up of different materials is shown. The section is symmetric about the y-axis which makes the calculation easier but the principles are the same for more general cross-sections. Use of different materials in a cross-section is normal in concrete and timber structures and also in new composite materials.

The basic idea in the analysis is to choose a reference E-modulus, and calculate the so-called transformed cross-sectional properties. These properties depend on the reference, but the final result namely strains and stresses are independent. In this example the reference is chosen as E_0.

The transformed area, A_t, is given below, and it is seen that stiffer parts contribute relatively more than more flexible parts.

$$A_t = \frac{E_1}{E_0}b_1t_1 + hb_0 + \frac{E_2}{E_0}b_2t_2 \tag{2.39}$$

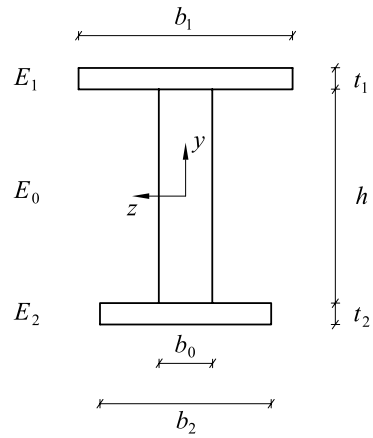

Figure 2.4: Cross-section with different materials

The transformed static moment S_{zt} is calculated along the same line as:

$$S_{zt} = \frac{E_1}{E_0} b_1 t_1 (\frac{1}{2}(h + t_1)) - \frac{E_2}{E_0} b_2 t_2 (\frac{1}{2}(h + t_2)) \tag{2.40}$$

The coordinate of the elastic center y_C is given as:

$$y_C = \frac{S_{zt}}{A_t} \tag{2.41}$$

It is noticed that the coordinate of the elastic center does not depend on the choice of reference E-modulus.
The moment of inertia $I_{z'z't}$ around an z'-axis through the elastic center is calculated as:

$$\begin{aligned} I_{z'z't} &= \frac{E_1}{E_0}(\frac{1}{12} b_1 t_1^3 + b_1 t_1 (\frac{1}{2}(h + t_1) - y_C)^2 + (\frac{1}{12} b_0 h^3 + b_0 h y_C^2 + \\ &\quad \frac{E_2}{E_0}(\frac{1}{12} b_2 t_2^3 + b_2 t_2 (\frac{1}{2}(h + t_2) + y_C)^2 \end{aligned} \tag{2.42}$$

The linear strain distribution is related to the internal forces N, M_z and M_y as:

$$\varepsilon_x = \frac{N}{E_0 A_t} - \frac{M_z}{E_0 I_{z'z't}} y' + \frac{M_y}{E_0 I_{yyt}} z \tag{2.43}$$

where the coordinate y' is measured from the z'-axis through the elastic center.
The stresses in the different parts of the material depend on the E-modulus. In material i the stress is:

$$\sigma_x = \frac{E_i}{E_0}(\frac{N}{A_t} - \frac{M_z}{I_{z'z't}} y' + \frac{M_y}{I_{yyt}} z) \tag{2.44}$$

The stress-distribution is linear within the individual parts, but not over the entire cross-section due to discontinuities in the E-modulus. The fundamental assumption that a plane in the cross-section remains plane is still valid.

The stresses are independent of the chosen reference E-modulus, which otherwise would have lead to a physically unsound method.

2.7 Numerical methods

A computer method for calculating the cross-sectional properties can be based on a subdivision of the cross-section into triangles. Different material properties in the cross-section can be handled by adding individual E-modules to each triangle.

The formulas for the basic triangular element shown in Figure 2.5 are given below. The numbering of the nodal points in the triangle defines the orientation, and in order to get a positive area the numbering should be anti-clockwise.

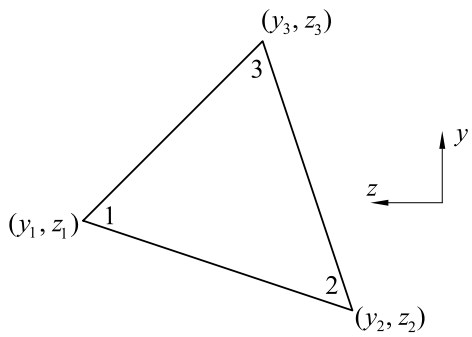

Figure 2.5: Triangular element

The area of the triangle, A, is given by:

$$A = \frac{1}{2}((y_2 - y_1)(z_3 - z_1) - (z_2 - z_1)(y_3 - y_1)) \tag{2.45}$$

The following formulas are calculated by means of the so-called area coordinates or triangular coordinates. More details on this can be found in various textbooks on the Finite Element Method, see e.g (Zienkiewicz 1977). Direct integration in the $y - z$ system is a tedious process. The static moment about the z- and y-axis are given by:

$$\begin{aligned} \int_A y dA &= \frac{1}{3}(y_1 + y_2 + y_3)A \\ \int_A z dA &= \frac{1}{3}(z_1 + z_2 + z_3)A \end{aligned} \tag{2.46}$$

The elastic center (y_C, z_c) is given by:

$$y_C = \frac{1}{3}(y_1 + y_2 + y_3) \qquad \text{and} \qquad z_C = \frac{1}{3}(z_1 + z_2 + z_3) \tag{2.47}$$

The moments of inertia, I_{zz}, I_{yy} and I_{yz} are given by:

$$\begin{aligned}
\int_A y^2 dA &= \frac{1}{12}(y_1^2 + y_2^2 + y_3^2 + 9y_C^2)A \\
\int_A z^2 dA &= \frac{1}{12}(z_1^2 + z_2^2 + z_3^2 + 9z_C^2)A \\
\int_A yz dA &= \frac{1}{12}(y_1 z_1 + y_2 z_2 + y_3 z_3 + 9y_C z_C)A
\end{aligned} \tag{2.48}$$

The algorithm works in the same procedure as the previous examples. It should be noted that the integrals can be regarded as sum of contributions of each triangle similar to the previous examples.

1. Loop over all triangles to find the area and static moments about the initial coordinate axis.
2. Determine the elastic center and make a coordinate transformation which places Origo in the elastic center.
3. Loop over all triangles to find the moments of inertia, I_{yy}, I_{zz}, I_{yz}.
4. Calculate the angle for the rotated principal system and the corresponding principal moments of inertia, see Equations (2.35-2.36).

In Figure 2.6 examples of triangulated cross-sections are shown. In the first example the triangles are constructed manually, whereas the triangles in the last example can be constructed automatically using only information on the nodal points on the contour.

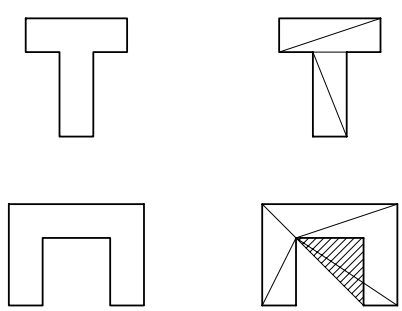

Figure 2.6: Triangulated cross-sections

In the automatic triangularization the starting point of the polygon is used as the first point in each triangle. The 2 following points are for the first triangle taken as point 2 and 3 and for next triangle as point 3 and 4 until the last triangle which is defined by the points 1, n-1 and n, where n is the number of points in the polygon. In this process some of the triangles can lie outside the perimeter but it is accounted for by other triangles. The area of the triangles depend on the orientation of the triangle.

In Appendix A a procedure written in MatLab is presented which calculates the sectional properties of a polygon. The procedure can be extended to cover more polygons with an individually assigned E-modulus. The polygon should be numbered anti-clockwise.

Chapter 3

Shear forces and torsional moment

Calculation of the shear stress distribution due to a shear force or a torsional moment is a complicated problem which involves solution of a 2-dimensional boundary value problem. There is only a very limited number of analytical solutions and for general cross-sections it is necessary to use a numerical method e.g. based on a Finite Element discretization or some approximate solution.

In the literature some exact solutions are given, see e.g (Timoshenko and Goodier 1951), (Seely and Smith 1967), (Gere and Timoshenko 1991) or for a more modern approach (Krenk 1989). In this context two analytical solutions are presented. The first deals with shear in a rectangular cross-section, and the second with torsion in an elliptic cross-section. The rest will be based on approximate methods.

3.1 Shear in rectangular cross-section

As introduction to shear a rectangular beam with length ℓ, height h and width b is considered.

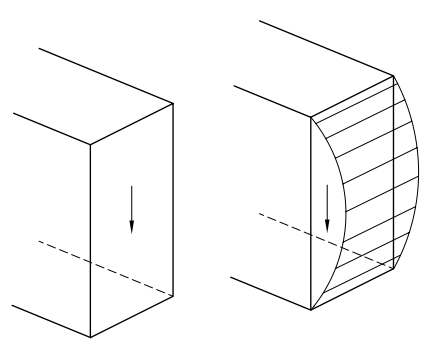

Figure 3.1: Shear stresses on rectangular cross-section

The beam is loaded with a shear force P_y in the free end corresponding to $x = \ell$ and fixed against displacement and rotation for $x = 0$. The material is linear-elastic with Young's modulus E and Poisson's ratio $\nu = 0$.

The displacement in direction of the beam axis is denoted u_x and the displacement perpendicular to the beam-axis and along the $y-$axis is denoted u_y. As $\nu = 0$ there will be no displacements in the $z-$direction.

An exact solution to this problem is given in Equation (3.1).

$$\begin{aligned} u_x &= -\frac{P}{EI}(\ell x - \frac{1}{2}x^2)y + \frac{P}{GA_k}(\frac{1}{4}y - \frac{5}{12}y^3\frac{1}{(h/2)^2}) \\ u_y &= \frac{P}{EI}(\frac{1}{2}\ell x^2 - \frac{1}{6}x^3) + \frac{P}{GA_k}x \end{aligned} \tag{3.1}$$

where the shear area $A_k = \frac{5}{6}\ bh$ and the moment of inertia $I = \frac{1}{12}\ bh^3$.

The only non-vanishing strain components are the normal strain ε_{xx} and the shear strain ε_{xy}.

$$\begin{aligned} \varepsilon_{xx} &= u_{x,x} = -\frac{P}{EI}(\ell - x)y \\ \varepsilon_{xy} &= \frac{1}{2}(u_{x,y} + u_{y,x}) = \frac{1}{2}\ \frac{P}{GA_k}(\frac{5}{4} - \frac{5}{4}(\frac{y}{h/2})^2) \end{aligned} \tag{3.2}$$

The only non-vanishing stress components are the normal stress σ_{xx} and the shear stress σ_{xy}.

$$\begin{aligned} \sigma_{xx} &= E\varepsilon_{xx} = -\frac{P}{I}(\ell - x)y \\ \sigma_{xy} &= 2\ G\varepsilon_{xy} = \frac{P}{A_k}(\frac{5}{4} - \frac{5}{4}(\frac{y}{h/2})^2) = \frac{3}{2}\ \frac{P}{A}(1 - (\frac{y}{h/2})^2) \end{aligned} \tag{3.3}$$

The normal stress is seen to correspond to a linear variation in the bending moment, see Chapter 2. The shear stress has a parabolic variation over the cross-section as shown in Figure 3.1. Integration of the shear stress over the cross-section gives the shear force P. The equivalent shear area A_k defines the shear stiffness together with the shear modulus $G = \frac{E}{2\ (1+\nu)}$.

The displacements over the cross-section means that "plane sections remain plane" is no longer valid. The displacement mode which is non-planar is often described as cross-sectional warping. The warping part in Equation (3.1) is non-unique, but by enforcing energy orthogonality between normal stress from bending and normal stress from non-uniform warping the displacement is uniquely determined. A discussion of energy orthogonality can be found in (Krenk 1989). Without this orthogonality a false value of A_k is determined, see (Timoshenko and Goodier 1951) which gave a value of $\frac{2}{3}A$.

The shear stiffness can be calculated in an alternative way only relying on the distribution of shear stresses, see (Gere and Timoshenko 1991) or (Krenk 1989). The method is based

on complementary energy, and only the results are given. The complementary energy for a section of a beam is given by:

$$E_c = V \frac{V}{G\ A_k}\ dx = \int_A \tau \frac{\tau}{G} dA dx \tag{3.4}$$

Through the shear distribution an estimate of the shear area A_k can be given. This is useful when the exact solution is not known, and the method will be applied in a following section dealing with I-profiles.

3.2 Shear forces - Grashof

From beam theory the shear force is given by the bending moment as:

$$V_y = M^z_{,x} \tag{3.5}$$

where $M^z_{,x}$ is the variation along the beam axis of the bending moment about the $z-$axis. Figure 3.2 shows a part of the beam where a cut is made. In the cutting surfaces equivalent sectional forces are introduced equivalent to the stresses. The forces F and $F+dF$ represent the normal stresses, and the shearing force H the shear stresses along the cut.

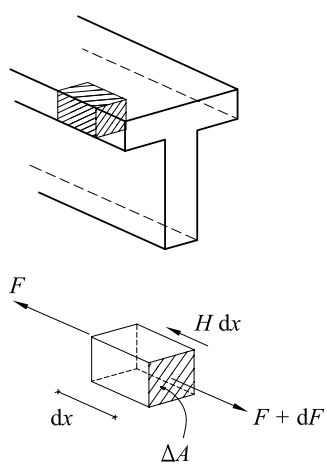

Figure 3.2: Equilibrium - shearing force

The force F represents the part of the bending moment M^z which is due to the area ΔA. The part of the total moment is given by the ratio between the static moment about the $z-$axis and the moment of inertia. Equilibrium of the part gives the so-called Grashof's formula:

$$H = \frac{dF}{dx} = M^z_{,x}\ \frac{S_z^{\Delta A}}{I} \tag{3.6}$$

If the thickness of the cut, t, is reasonably small the shearing force can be assumed to be constant. In this way an estimate of the shear stress is given by:

$$\tau_{average} = \frac{H}{t} \tag{3.7}$$

It should be noted that Grashof's formula determines the shear stresses directed in the beam axis. But due to the symmetric stress tensor which states that $\sigma_{xy} = \sigma_{yx}$ this is also the shear stress in the $y-$direction. The shear force in a beam theory secures both equilibrium for the vertical direction ($y-$axis) and equilibrium due to changes in bending moments. Even though the shearing force H is determined exact Grashof's formula is still an approximate method as the force has to be distributed over a thickness.

3.3 Example on shear stresses

In the following examples Grashof's formula is used to give an estimate of the shear stress distribution. In the first example a shear force V directed opposite to the y-axis is acting on an I-profile with the dimensions shown in Figure 3.3. The shear stiffness is estimated by formula (3.4).

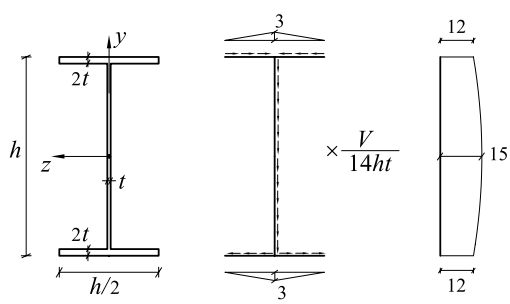

Figure 3.3: Shear stresses in I-profile

The moment of inertia about the $z-$axis is found by means of Table B.3 in Appendix B.

$$I_{zz} = \frac{1}{12} t\ h^3 + 2 \times (2\ t)\frac{h}{2}(\frac{h}{2})^2 = \frac{7}{12} t\ h^3 \tag{3.8}$$

The shear stress in the flanges will be directed in the $z-$direction. The magnitude is determined by using Grashof's formula on the upper left flange cut for $z = z_d$. The shearing force is:

$$H = 2\ t(\frac{h}{4} - z_d) \times \frac{h}{2}\frac{V}{I_{zz}} \tag{3.9}$$

The variation of the shearing force is linear, and the value for $z_d = \frac{h}{4}$ is 0. The shear stress is assumed constant over the cut, and the shear stress for $z_d = 0$ is:

$$\tau_f = 2\ t\frac{h}{4}\ \frac{h}{2}\frac{V}{\frac{7}{12}th^3\ 2\ t} = 3\ \frac{V}{14\ h\ t} \tag{3.10}$$

The shear stress in the web is found by the same procedure. The stress for $y = \frac{h}{2}$ is four times the size in the flange. It is due to the double contribution to the static moment and that the thickness is only half of the flange thickness.

The shearing force for a cut positioned in $y = y_d$ is:

$$H = (\frac{1}{2}t\ h^2 + \frac{1}{2}(\frac{h}{2} - y_d)t(\frac{h}{2} + y_d))\frac{V}{I_{zz}} \tag{3.11}$$

The shearing force will vary parabolic along the web, and the value of the shear stress in the middle ($y_d = 0$) is:

$$\tau_w = \frac{5}{8}t\ h^2\ \frac{V}{\frac{7}{12}th^3\ t} = 15\ \frac{V}{14\ h\ t} \tag{3.12}$$

The remaining part of the shear stress distribution can be found by symmetry. In Figure 3.3 the shear stress distribution is shown, and it is noticed that the integral of the shear stress in the $y-$direction equals the shear force V. The shear stresses in the $z-$direction have no resultant force as expected.

The shear stiffness can be calculated by means of Equation (3.4).

$$\begin{aligned} \int_A \frac{\tau^2}{G} dA &= (\frac{V}{14\ h\ t})^2[4 \times \frac{1}{3}\frac{h}{4}\ 2t\ 3^2 + \int_{-0.5h}^{0.5h} (15 - 3(\frac{y}{0.5h})^2)^2\ t\ dy]\frac{1}{G} \\ &= 1.0347\frac{V^2}{G\ h\ t} \end{aligned} \tag{3.13}$$

The shear area is then found to be:

$$A_k = 0.966\ h\ t \tag{3.14}$$

The normal assumption $A_k = A_{web}$ is seen to be very accurate. Another common approximation is to assume a constant shear stress along the web, and in the example this would underestimate the maximum shear stress with 7 %.

The effect of the shear stresses in the flange is two-fold. The first effect is that the distribution along the web becomes more uniform than for a beam, and the second effect which is much smaller is the contribution to the strain energy.

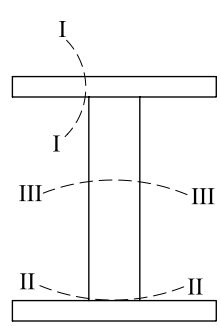

Figure 3.4: Shear stresses in I-profile with different materials

For cross-sections build of different materials the methodology is the same. The only difference is that the contribution form each part should be weighted according to its stiffness.

An I-profile shown in Figure 3.4 is typical for stressed-skin structures build of timber and ply-wood. The flanges are typically somewhat stiffer than the timber part. The three cuts are the critical sections for shear.

In Grashof's formula the static moment and moment of inertia should be replaced by the transformed (or weighted) parts. For cut I-I we get:

$$\tau = \frac{S_{zt}^{tI-I} V}{I_{zzt}} \frac{1}{t^{I-I}} \tag{3.15}$$

where S_{zt}^{tI-I} is the transformed static moment about the $z-$axis for part I-I, I_{zzt} the transformed moment of inertia for the cross-section, V the shear force and t^{I-I} the thickness of the cut. It is noticed that the choice of reference modulus has no influence on the shear stress.

3.4 Torsional stiffness and shear stresses

The torsion problem depends very much on the type of profile. For thin-walled open and closed profiles the approximate results are very accurate and the methods are general. The torsional resistance is very different for the two types of profiles. The closed profiles are a lot stiffer and the maximum shear stress smaller. In this context only results are presented and the literature contains many textbooks on thin-walled beams, which theoretically first was treated by Vlasov, (Vlasov 1961).

For solid sections the general problem has to be solved numerically e.g. by a 2-dimensional Finite Element method. There is only a few analytical solutions and no simple approximation exists. In this context an analytical solution for an elliptic cross-section is presented together with results for a rectangular cross-section

3.4.1 Open profile

Torsion in open profiles like the U-profile shown in Figure 3.5 results in a rotation of the profile in the $y-z$-plane and axial displacements in the direction of the beam axis, so-called warping of the cross-section. Similar to the shear deformations plane sections no longer remain plane. The center of rotation is called the shear center and has the same meaning for shear forces and torsion as the elastic center has for normal forces and moments. Shear forces acting through the shear center do not create torsion. The shear center will for a U-profile as shown in Figure 3.5 be situated under the horizontal flange. A shear force through the elastic center will therefore give torsion. Methods to calculate the shear center are outside the scope of this text but more information can be found in textbooks on thin-walled structures or e.g. (Krenk 1989). Torsion in open profiles is of special interest in connection with stability e.g. lateral or torsional buckling, see (Timoshenko and Gere 1961).

The warping displacements define the so-called warping stiffness of the cross-section, see e.g (Timoshenko and Gere 1961).

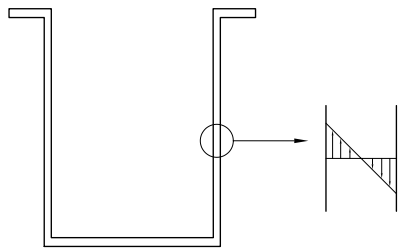

Figure 3.5: Shear stresses in open profiles

The shear stresses form torsion will be distributed as shown in Figure 3.5. Each small section contributes to the torsional moment, but the effectiveness is small as it depends on the thickness of the wall. The torsional moment of inertia is given as:

$$I_V = \frac{1}{3} \int_C t(s)^3 ds \tag{3.16}$$

The maximum shear stress will be in the parts with largest thickness, and the value is:

$$\tau_{max} = \frac{M_V}{I_V} t \tag{3.17}$$

For the example shown in Figure 3.6 the torsional moment of inertia is:

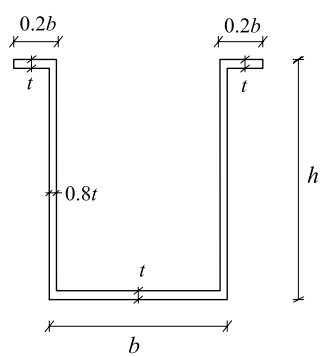

Figure 3.6: Open U-profile

$$I_V = \frac{1}{3}(2 \times 0.2bt^3 + 2 \times h(0.8t)^3 + bt^3) = \frac{1}{3}t^3(1.4b + 0.512h) \tag{3.18}$$

The torsional moment of inertia is low as it depends on t^3. For open profiles stability often limits the load carrying capacity.

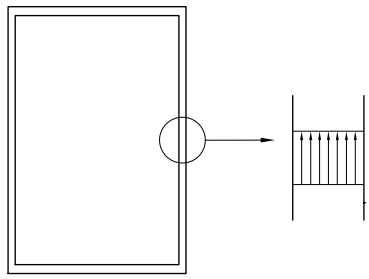

Figure 3.7: Shear stresses in closed profiles

3.4.2 Closed profile

In the closed profiles the shear stresses can act more efficiently as shown in Figure 3.7. The shear stresses are constant through the thickness and create a shear flow around the profile. In this way the resulting torsional moment is proportional to the enclosed area.

The torsional moment of inertia is given by:

$$I_V = 4\frac{A_C^2}{\int_C t^{-1}(s)ds} \tag{3.19}$$

where A_C is the enclosed area and t is the thickness. The integral of t^{-1} along the contour of the profile C defines an average of the thickness.

The maximum shear stress is in the parts with smallest thickness as given in (3.20). It should be noted that the shear flow is constant around the profile.

$$\tau_{max} = \frac{M_V}{2A_C t min} \tag{3.20}$$

Similar to the open profiles closed profiles subjected to a torsional moment will rotate about the shear center and have axial displacements (warping). The warping stiffness is considerably larger and therefore the warping part is of less interest.

In the example shown in Figure 3.6 the torsional moment of inertia is:

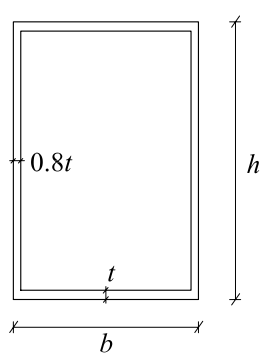

Figure 3.8: Closed rectangular profile

$$I_V = 4\frac{b^2h^2}{2h\frac{1}{0.8t} + 2b\frac{1}{t}} \tag{3.21}$$

and the maximum shear stress will be in the parts with smallest thickness:

$$\tau_{max} = \frac{M_V}{2\ b\ h\ 0.8\ t} \tag{3.22}$$

The difference between an open and a closed profile is illustrated by calculating I_V and τ_{max} for an open profile with a similar geometry as in Figure 3.7. The cut that makes the closed profile open can be placed anywhere on the profile.
The torsional moment of inertia is:

$$I_V = \frac{1}{3}(2 \times h(0.8t)^3 + 2 \times bt^3) \tag{3.23}$$

and the shear stress is:

$$\tau_{max} = \frac{M_V}{I_V}t \tag{3.24}$$

For $h = 1.5b$ the ratios between the torsional moments of inertia and shear stresses are:

$$\frac{I_V^{closed}}{I_V^{open}} = 1.3279(\frac{b}{t})^2 \tag{3.25}$$

and

$$\frac{\tau_{max}^{closed}}{\tau_{max}^{open}} = 0.4911\frac{t}{b} \tag{3.26}$$

It is seen that the torsional stiffness is many times higher for closed profiles than for open profiles. The shear stresses are on the other hand much larger for the open profiles which is due to the less effective way of carrying stresses shown in Figure 3.5 in opposition to the stress pattern shown in Figure 3.8.

3.4.3 Solid section

For an elliptic cross-section it is possible to construct an analytic solution. The ellipse is defined by the two half axes a and b. A parametric definition of the contour of the ellipse is:

$$(y, z) = (a\ \cos\theta, b\ \sin\theta) = r(\theta)\ (\cos\theta, \sin\theta) \tag{3.27}$$

where θ is an angle in the interval $[0; 2\pi]$. The distance from origo r is given by:

$$r^2(\theta) = \frac{a^2\ b^2}{b^2\cos^2\theta + a^2\sin^2\theta} \tag{3.28}$$

The displacements are conveniently defined in a polar coordinate system as:

$$
\begin{aligned}
u_r &= 0 \\
u_\theta &= r\ \phi \\
u_x &= -\frac{1}{2} r^2\ \frac{a^2 - b^2}{a^2 + b^2}\ \sin 2\theta\ \phi_{,x}
\end{aligned}
\tag{3.29}
$$

where u_r is the displacement in the $r-$direction, u_θ is the displacement perpendicular to the $r-$direction and u_x is the displacement in the direction of the beam axis. The angle of torsion is denoted ϕ, and the derivative of the torsion angle $\phi_{,x}$ defines the magnitude of the torsional moment. The displacement is a rotation around origo and a displacement in the direction of the beam axis (warping).

The only non-vanishing strains are the shear strains in the $\theta - x$ plane and in the $r - x$ plane. On the contour the resulting shear strain is perpendicular to the normal of the contour. In this way it can be proven that the resulting stress distribution is equivalent to a torsional moment.

The torsional stiffness is deduced from the displacement field in (3.29) as:

$$
I_V = \pi\ \frac{a^3 b^3}{a^2 + b^2} \tag{3.30}
$$

The maximum shear stress is found at the boundary in the point with smallest distance to the center. The value is given by:

$$
\tau_{max} = \frac{2\ M_V}{\pi\ a\ b}\ \frac{1}{\min(a, b)} \tag{3.31}
$$

where M_V is the torsional moment.

For $a = b$ the section is circular and the result form Equation (3.30) corresponds to the result given in Table B.2 in Appendix B. The maximum shear stress for a circular profile is $2\ M_V/(\pi\ r^3)$. This corresponds to a linear shear stress distribution along the radius starting with 0 at the center. For a circular section the warping part vanishes.

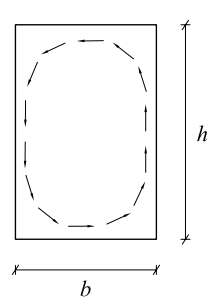

Figure 3.9: Shear stresses in solid section

For a rectangular section the shear distribution is more complicated, and the solution is given as a series expansion, see e.g (Timoshenko and Goodier 1951). The shear flow is illustrated in Figure 3.9 and the shear stresses are largest at the contour. Similar to the elliptic cross-section the maximum shear stress is found at the point on the contour with smallest distance to the center.

The torsional moment of inertia is given by:

$$I_V = hb^3(\frac{1}{3} - 0.21\frac{b}{h} + 0.018(\frac{b}{h})^5) \tag{3.32}$$

and the maximum shear stress as

$$\tau_{max} = \frac{3h + 1.8b}{h^2b^2} M_V \tag{3.33}$$

The cross-sectional warping stiffness is much larger than for the open profiles, and therefore the warping part is of less interest.

References

Gere, J. M. and Timoshenko, S. P. (1991). *Mechanics of Materials*, Chapman and Hall, London.

Krenk, S. (1989). Three-dimensional elastic beam theory, part 1 and 2, *Series F 114-115*, Department of Structural Engineering, Technical University of Denmark.

Seely, F. B. and Smith, J. O. (1967). *Advanced Mechanics of Materials*, John Wiley & Sons.

Timoshenko, S. P. and Gere, J. M. (1961). *Theory of Elastic Stability*, McGraw-Hill.

Timoshenko, S. P. and Goodier, J. N. (1951). *Theory of Elasticity*, McGraw-Hill.

Vlasov, V. Z. (1961). *Thin-Walled Elastic Beams. 2. ed.*, Israel Program for Scientific Translations, Jerusalem.

Zienkiewicz, O. C. (1977). *The Finite Element Method*, McGraw-Hill.

Appendix A

MatLab procedure for polygon

```
%
% Cross : Calculates sectional properties for a polygon
%
% Coordinates for polygon.
%
% Skew profile   Example section 2.5    h = 10
%
YZ = [ 0, 6;
       8, 6;
       8, 0;
      10, 0;
      10, 8;
       0, 8];
%
% Number of points in polygon
%
n = size(YZ,1);

y1 = YZ(1,1);
z1 = YZ(1,2);
Area = 0;
Sy = 0;
Sz = 0;
%
% Loop over n-2 triangles
%
for i=1:n-2
  y2 = YZ(i+1,1);
  z2 = YZ(i+1,2);
  y3 = YZ(i+2,1);
  z3 = YZ(i+2,2);
  yg = (y1 + y2 + y3)/3;
  zg = (z1 + z2 + z3)/3;
  dA = 0.5*((y2-y1)*(z3-z1)-(z2-z1)*(y3-y1));
```

```
  Area = Area + dA;
  Sy = Sy + dA*zg;
  Sz = Sz + dA*yg;
end
%
% Elastic Center
%
yc = Sz/Area;
zc = Sy/Area;

%
% Coordinate transformation to elastic center
%
YZ(:,1) = YZ(:,1)-yc;
YZ(:,2) = YZ(:,2)-zc;

y1 = YZ(1,1);
z1 = YZ(1,2);
Izz = 0;
Iyy = 0;
Iyz = 0;
%
% Loop over n-2 triangles
%
for i=1:n-2
  y2 = YZ(i+1,1);
  z2 = YZ(i+1,2);
  y3 = YZ(i+2,1);
  z3 = YZ(i+2,2);
  yg = (y1 + y2 + y3)/3;
  zg = (z1 + z2 + z3)/3;
  dA = 0.5*((y2-y1)*(z3-z1)-(z2-z1)*(y3-y1));
  dIzz = (y1^2 + y2^2 + y3^2 + 9*yg^2)/12*dA;
  dIyy = (z1^2 + z2^2 + z3^2 + 9*zg^2)/12*dA;
  dIyz = (y1*z1 + y2*z2 + y3*z3 + 9*yg*zg)/12*dA;
  Izz = Izz +dIzz;
  Iyy = Iyy +dIyy;
  Iyz = Iyz +dIyz;
end
%
% Transformation
%
v = 0.5*atan(2*Iyz/(Izz-Iyy));
I1 = Izz*cos(v)^2 + Iyy*sin(v)^2+Iyz*sin(2*v);
I2 = Izz*cos(v+pi/2)^2 + Iyy*sin(v+pi/2)^2+Iyz*sin(2*v+pi);
angle = v*180/pi;
```

Appendix B

Solutions for some parametric profiles

Geometry	Cross-sectional properties
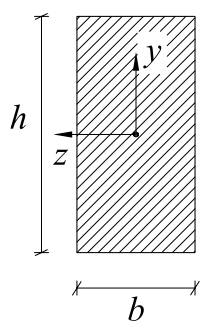	Normal force, shear $A = h\ b$ $\qquad A_k = \frac{5}{6}A$ Bending strong axis $I_{zz} = \frac{1}{12}b\ h^3$ $\qquad i_z = \frac{h}{\sqrt{12}}$ $W_z = \frac{1}{6}b\ h^2$ Bending weak axis $I_{yy} = \frac{1}{12}h\ b^3$ $\qquad i_y = \frac{b}{\sqrt{12}}$ $W_y = \frac{1}{6}h\ b^2$ Torsion $I_v = \frac{1}{3}hb^3(1 - 0.627\frac{b}{h}(1 - \frac{1}{12}(\frac{b}{h})^4))$
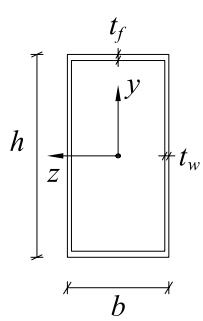	Normal force, shear $A = 2\ (h\ t_w + b\ t_f)$ $\qquad A_k \sim 2\ h\ t_w$ Bending strong axis $I_{zz} \approx \frac{1}{6}t_w\ h^3 + \frac{1}{2}b\ t_f\ h^2$ $W_z \approx \frac{1}{3}t_w\ h^2 + b\ t_f h$ Bending weak axis $I_{yy} \approx \frac{1}{2}h\ t_w\ b^2 + \frac{1}{6}t_f\ b^3$ $W_y \approx h\ t_w b + \frac{1}{3}t_f\ b^2$ Torsion $I_v = 2\ h^2 b^2 \frac{t_w\ t_f}{h\ t_f + b\ t_w}$

Table B.1: Parametric rectangular cross-sections

Geometry	Cross-sectional properties
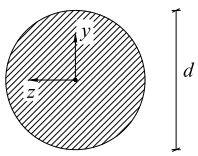	Normal force, shear $A = \frac{\pi}{4}d^2$ $\quad A_k = \frac{96(1+\nu)^2}{117+244\nu+148\nu^2}A \cong 0.8A$ Bending both axes $I_{zz} = \frac{\pi}{64}d^4$ $\quad i_z = \frac{d}{4}$ $W_z = \frac{\pi}{32}d^3$ Torsion $I_v = \frac{\pi}{32}d^4$
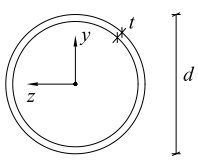	Normal force, shear $A \approx \pi dt$ $\quad A_k \sim \frac{1}{2}A$ Bending both axes $I_{zz} \approx \frac{\pi}{8}t\ d^3$ $\quad i_z = \frac{d}{2\sqrt{2}}$ $W_z \approx \frac{\pi}{4}t\ d^2$ Torsion $I_v \approx \frac{\pi}{4}t\ d^3$

Table B.2: Parametric circular cross-sections

Geometry	Cross-sectional properties
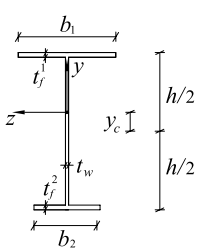	Normal force $\quad A \approx h\ t_w + b_1\ t_f^1 + b_2\ t_f^1$ Shear z $\quad A_k \sim h\ t_w$ Shear y $\quad A_k \sim\ b_1\ t_f^1 + b_2\ t_f^1$ Elastic center $y_c = \frac{b_1\ t_f^1 - b_2\ t_f^1}{A}$ Bending strong axis $I_{zz} \approx \frac{1}{12}h\ t_w^3 + b_1\ t_f^1\ (\frac{h}{2} - y_c)^2 + b_2\ t_f^2(\frac{h}{2} + y_c)^2$ $W_z \approx \frac{I_{zz}}{\frac{h}{2}+\lvert y_c\rvert}$ $\quad i_z = \sqrt{\frac{I_{zz}}{A}}$ Bending weak axis $I_{yy} \approx \frac{1}{12}(t_f^1\ (b_1)^3 + t_f^2\ (b_2)^3)$ $W_y \approx \frac{2I_{yy}}{max(b_1,b_2)}$ $\quad i_y = \sqrt{\frac{I_{yy}}{A}}$ Torsion $I_v = \frac{1}{3}(h\ (t_w)^3 + b_1\ (t_f^1)^3 + b_2\ (t_f^2)^3)$

Table B.3: Parametric I-section

Geometry	Cross-sectional properties
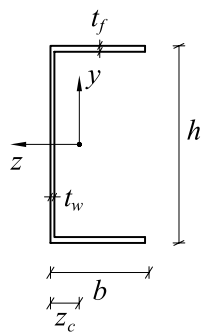	Normal force $A \approx h\ t_w + 2\ b\ t_f$ Shear z $A_k \sim h\ t_w$ Shear y $A_k \sim\ 2\ b\ t_f$ Elastic center $z_c = \frac{b^2\ t_f}{A}$ Bending strong axis $I_{zz} \approx \frac{1}{12}h^3\ t_w + \frac{1}{2}b\ t_f\ h^2$ $W_z \approx \frac{1}{6}h^2\ t_w + b\ t_f\ h$ $\quad i_z = \sqrt{\frac{I_{zz}}{A}}$ Bending weak axis $I_{yy} \approx h\ t_w z_c^2 + \frac{1}{6}t_f\ b^3 + 2\ b\ t_f\ (\frac{b}{2} - z_c)^2$ $W_y \approx \frac{I_{yy}}{b - z_c}$ $\quad i_y = \sqrt{\frac{I_{yy}}{A}}$ Torsion $I_v = \frac{1}{3}h\ t_w^3 + 2\ b\ t_f^3$

Table B.4: Parametric U/C-section